# Window Replacement Master Plan

For

## The Hat Factory Building
## 1235 West 6th Street
## Cleveland, Ohio 44113

*Presented By*

COLLIERS
OSTENDORF-MORRIS

**REAL ESTATE MANAGEMENT SERVICES**

*Amy B. Wolf-Fischer*
*1100 Superior Avenue*
*Suite 800*
*Cleveland, Ohio 44114*
*216.861-7200*
*www.colliers.com*

September 16, 2008

COLLIERS
OSTENDORF-MORRIS

Global commercial real estate expertise

## TABLE OF CONTENTS


- Building History
- Proposal Plan
- Current Windows
- Preplacement Window Proposal
- Current & Replacement Window Comparison

COLLIERS
OSTENDORF-MORRIS

Global commercial real estate expertise

# Building History

## Hat Factory and Hart & Company Building

(architect unknown, 1888)
1235-1239 West 6th Street
Cleveland, Ohio 44113

For most of this century, this building was occupied by the White Tool and Supply Company. Although the building was originally built for E.I. Baldwin, the first occupant was Hart and Company, a distributes of ladies' fine hats. The company's founder had worked for Morgan, Root and Company, later known as Root-McBride.

It is one of the earliest buildings in the District to be converted to residential use (1987). The Hat Factory is listed on the National register of Historic Places and is a Cleveland Landmark.

---

Http://www.warehousedistrict.org/tour/highlite/#hat

COLLIERS
OSTENDORF-MORRIS

Global commercial real estate expertise

# Proposal Plan

## PROPOSAL PLAN

We are proposing a window replacement master plan for The Hat Factory Apartment Building located ate 1235 West 6th Street. Although there are only four windows that need to be replaced this year, we would like to be able to get the approval now for all current and future window replacements at the building.

As you are aware, The Hat Factory Apartment Building underwent a historic renovation and conversion in 1987. Since that time, I do not believe we have replaced any of the windows. However, after twenty one years, some of the wooden sashes are rotting and window replacement is needed.

We secured Jamieson Ricca as the contractor for the job based upon the recommendation from the Historic Warehouse District. After a visual inspection was performed, Jamieson Ricca came back to us with a scope of work, engineering drawings of the replacement window, and an actual picture of the windows they plan to install as photographed from another building they worked on in Cleveland. The replacement windows proposed are very similar to the current windows on the building in terms of materials, and they will be painted the same color as well.

COLLIERS
OSTENDORF-MORRIS

Global commercial real estate expertise

# Window Sash

**Rotting Window Sash**

1100 Superior Avenue • Suite 800 • Cleveland, Ohio 44114 • 216.861.7200 • www.colliersom.com

COLLIERS
OSTENDORF-MORRIS

Global commercial real estate expertise

# Current Windows South Side of Building

**Current Windows**
**South Side of Building**

1100 Superior Avenue • Suite 800 • Cleveland, Ohio 44114 • 216.861.7200 • www.colliersom.com

COLLIERS
OSTENDORF-MORRIS

Global commercial real estate expertise

# Current Windows East Side of Building

**Current Windows**
**East Side of Building**

1100 Superior Avenue • Suite 800 • Cleveland, Ohio 44114 • 216.861.7200 • www.colliersom.com

JAMIESON RICCA
WINDOWS
www.jamiesonricca.com

**September 11, 2008**

**Amy Fischer**
**Colliers International**
**Cleveland, Ohio**

**Re: The Hat Factory Sent Via: Fax**

**Dear Amy,**

Thank you for the opportunity to provide the following window replacement estimate. The Jamieson-Ricca Co. offers a dependable and proven selection of architectural windows and doors. Please review the presented information in order to ensure we have met your requirements.

Jamieson Ricca has reviewed the site conditions and researched product to best meet the historical requirements of the building. We propose the following manufacturer and scope of work:

**Furnish & Install Wood Marvin Ultimate Insert Double-hung Windows**. Insert window designed and sized to fit into the existing sash pocket leaving existing casings and trim intact. Pine sash and frames primed interior and exterior, clear insulating glass, standard taupe finish sash lock. Installation includes demo of existing sash, installation of new window, insulation, all necessary installation accessories and caulking.

Not included: furnish, installation or finishing of interior/exterior casings.

**Sales tax is included.** This estimate is valid for thirty days. All work to be completed in a professional and workmanlike manner according to standard practices and per OSHA guidelines. Our workers are fully covered by Workman's Compensation insurance. We are a registered, licensed, bonded and insured contractor in the City of Cleveland.

Thank you again for this opportunity. The Jamieson Ricca Co. has been providing quality window and door systems for over thirty years.

**Sincerely,**

**Judy Novak**
**Jamieson Ricca Windows**

**JR Estimate # 08073**
**Enclosure (0)**

2800 EUCLID AVENUE ~ CLEVELAND, OHIO 44115
PHONE: (216) 621-4277 FAX: (216) 621-7665

*THE JAMIESON-RICCA CO. HAS BEEN SETTING THE STANDARD OF QUALITY SINCE 1969.*

COLLIERS
OSTENDORF-MORRIS

Global commercial real estate expertise

# Jamieson Ricca Replacement Windows

1100 Superior Avenue • Suite 800 • Cleveland, Ohio 44114 • 216.861.7200 • www.colliersom.com

# WOOD ULTIMATE INSERT DOUBLE HUNG

## SECTION DETAILS: OPERATOR

SCALE: 3″ = 1′ 0″

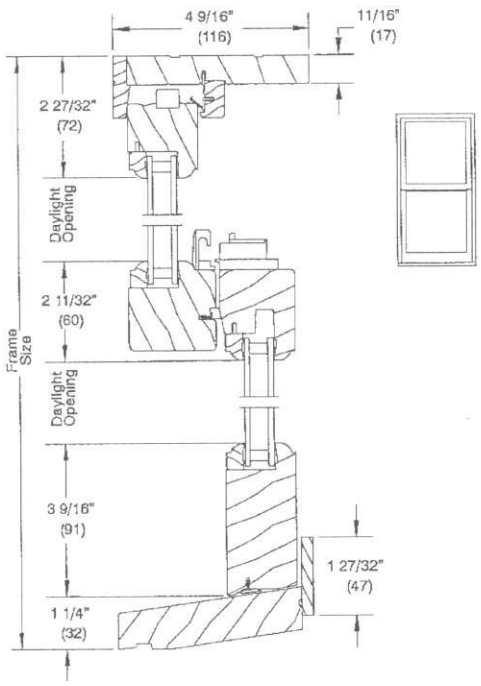


Head Jamb, Checkrail,
with Beveled Frame

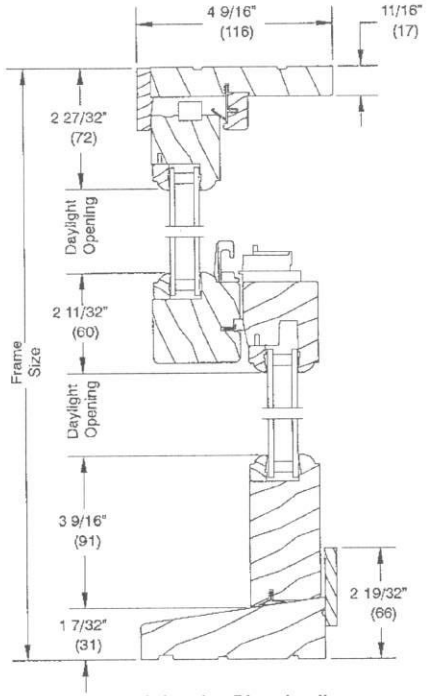


Head Jamb, Checkrail,
with Flat Frame

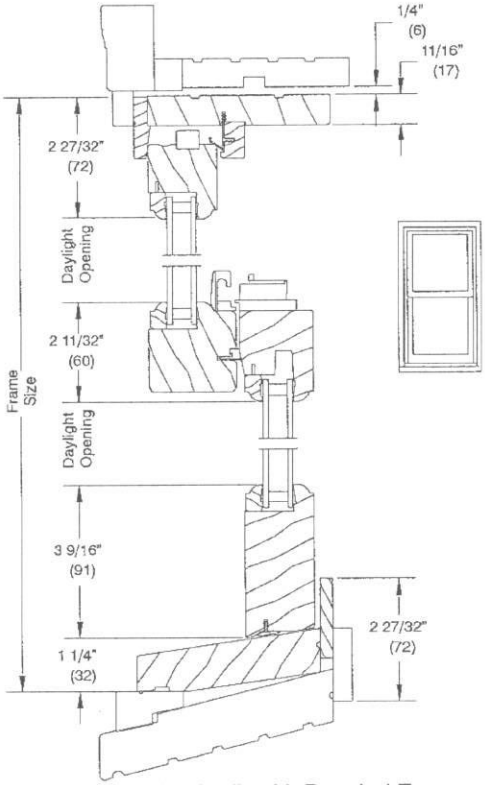


Head Jamb, Checkrail, with Beveled Frame
**installed in existing frame**

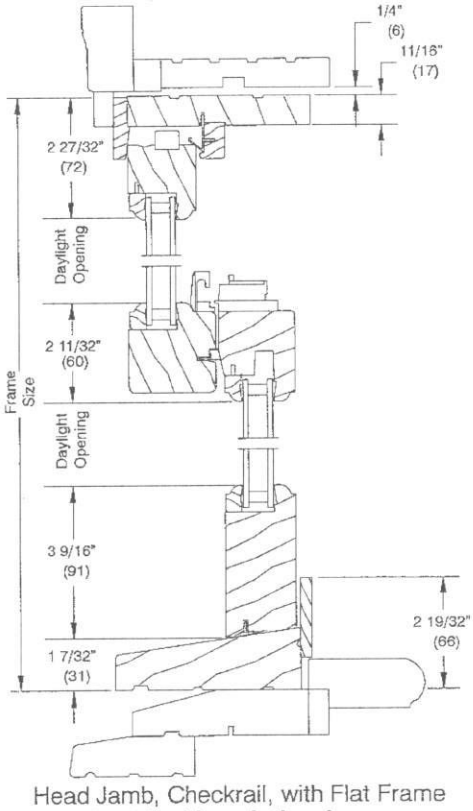


Head Jamb, Checkrail, with Flat Frame
**installed in existing frame**

# WOOD ULTIMATE INSERT DOUBLE HUNG

## SECTION DETAILS: OPERATOR

SCALE: 3″ = 1′ 0″

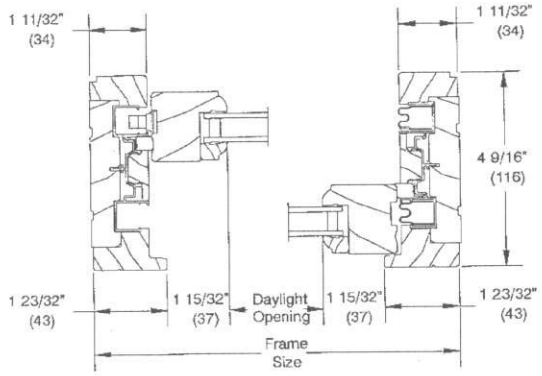


Jambs

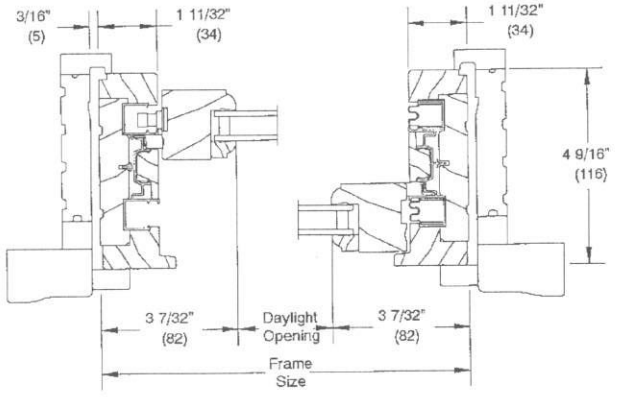


Jambs **installed in existing frame**

COLLIERS
OSTENDORF-MORRIS

Global commercial real estate expertise

# Current & Replacement Window Comparison

Current Windows

Current Windows

Replacement Windows